mdc

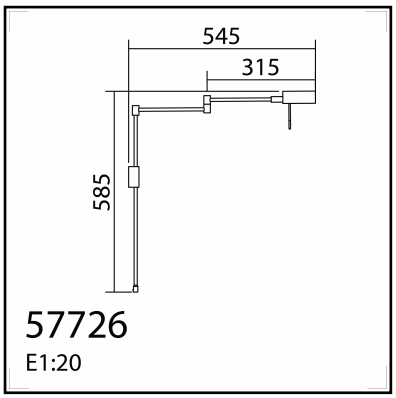

TECHNICAL DATA 577262202

LAMP INFO

Description:	WL LITE Bronce 8W plug dimable 3k
Mark:	10002 WL Wall Lamp
Reference:	577262202
Range:	57504 LITE
Code EAN:	8421797772628
Measures (mm):	0585-0088-0545
Weight (kg):	1.05

Lampholder/Watts:	LED 8W	**CCT:**	3000K	**Switch:**	Touch
Bulb included:	Yes - SMD	**Lm:**	360	**USB_C:**	No
Class:	Class II	**Effi LS:**	D	**Shade:**	No
IP:	20	**CRI:**	85,00	**Dimmable:**	Progressive 0-100% dimmer included
Driver inc.:	No	**Lamp Power:**	8,00W		
Voltage/Frequence:	220-240V	**Applied Standard:**	CE / LVD		

PACKAGING DETAILS

	Individual Box	**Outer Box**	**Master Box**
Type:	MDC - BROWN PRINTED	MDC - MARRON / BROWN	
Units:	1.00	8.00	0.00
Measures:	0395-0070-0660	0605-0415-0680	____-____-____
Gross Weight (kg):	1.30	12.20	-
CTN 40':	2.624,00		

OBSERVATIONS

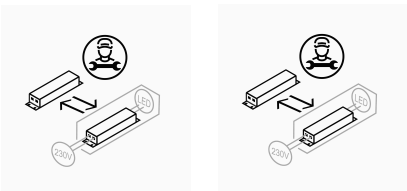

mdc

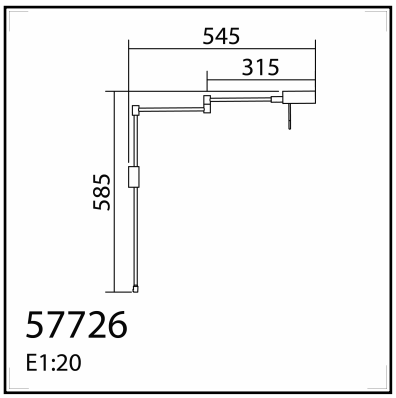

TECHNICAL DATA 577265902

LAMP INFO

Description:	WL LITE Negro mate + latón mate 8W plug dimable 3k
Mark:	10002 WL Wall Lamp
Reference:	577265902
Range:	57504 LITE
Code EAN:	8421797772659
Measures (mm):	0585-0088-0545
Weight (kg):	1.05

Lampholder/Watts:	LED 8W	**CCT:**	3000K	**Switch:**	Touch
Bulb included:	Yes - SMD	**Lm:**	360	**USB_C:**	No
Class:	Class II	**Effi LS:**	D	**Shade:**	No
IP:	20	**CRI:**	85,00	**Dimmable:**	Progressive 0-100% dimmer included
Driver inc.:	No	**Lamp Power:**	8,00W		
Voltage/Frequence:	220-240V	**Applied Standard:**	CE / LVD		

PACKAGING DETAILS

	Individual Box	**Outer Box**	**Master Box**
Type:	MDC - BROWN PRINTED	MDC - MARRON / BROWN	
Units:	1.00	8.00	0.00
Measures:	0395-0070-0660	0605-0415-0680	____-____-____
Gross Weight (kg):	1.30	12.20	-
CTN 40':	2.624,00		

OBSERVATIONS

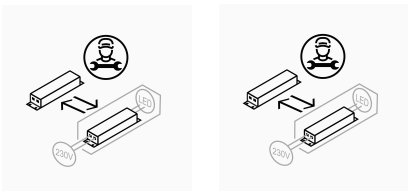

mdc

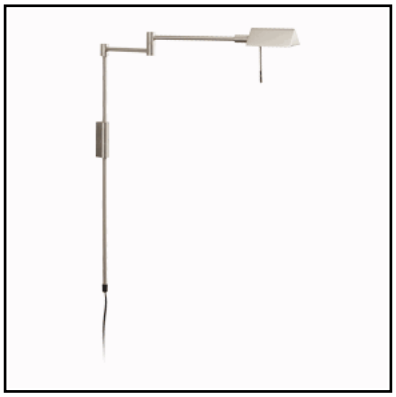

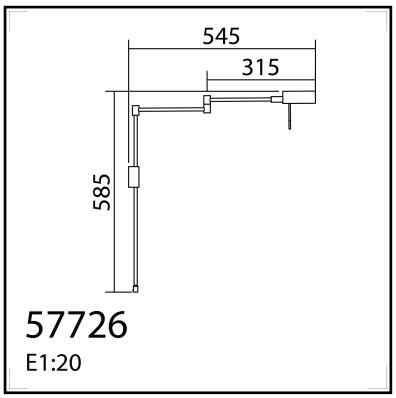

TECHNICAL DATA 577269702

LAMP INFO

Description:	WL LITE Níquel mate 8W plug dimable 3k
Mark:	10002 WL Wall Lamp
Reference:	577269702
Range:	57504 LITE
Code EAN:	8421797772697
Measures (mm):	0585-0088-0545
Weight (kg):	1.05

Lampholder/Watts:	LED 8W	**CCT:**	3000K	**Switch:**	Touch
Bulb included:	Yes - SMD	**Lm:**	360	**USB_C:**	No
Class:	Class II	**Effi LS:**	D	**Shade:**	No
IP:	20	**CRI:**	85,00	**Dimmable:**	Progressive 0-100% dimmer included
Driver inc.:	No	**Lamp Power:**	8,00W		
Voltage/Frequence:	220-240V	**Applied Standard:**	CE / LVD		

PACKAGING DETAILS

	Individual Box	**Outer Box**	**Master Box**
Type:	MDC - BROWN PRINTED	MDC - MARRON / BROWN	
Units:	1.00	8.00	0.00
Measures:	0395-0070-0660	0605-0415-0680	____-____-____
Gross Weight (kg):	1.30	12.20	-
CTN 40':	2.624,00		
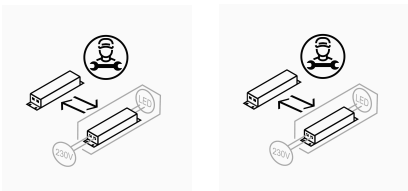
OBSERVATIONS