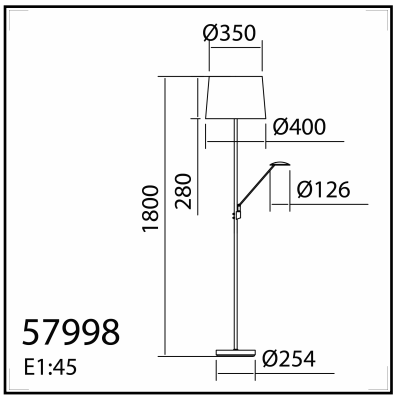



TECHNICAL DATA **579983504**

LAMP INFO

Description:	FL DAPHNE SH SN 1xE27+9W CCT + pant blanca
Mark:	20000 FL Floor Lamp
Reference:	579983504
Range:	57991 DAPHNE
Code EAN:	8421797799830
Measures (mm):	254-254-1800
Weight (Kg):	4,84

Lampholder:	E27 LED max. 20W	**CCT:**	2700K to 4000K	**Switch:**	Hand
Bulb Inc.:	N	**Lm:**	750	**USB C:**	N
Class:	II	**Effi LS:**	F	**Shade:**	Y
IP:	20			**Dimmable:**	Y
Voltage/Frequence:	230Vac 50/60Hz	**Lamp Power:**	E27 LED max. 20W	**Remote control:**	N

Bulb Num.:	1

PACKAGING DETAILS

	Individual Box:	**Outer Box:**
Type:	Brown Printed	
Units:	1	1
Measures (mm):	880-125-290	880-125-290
Gros Weight (kg):	5,00	5,00
CTN 40':	2.122,89	

OBSERVATIONS

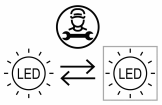

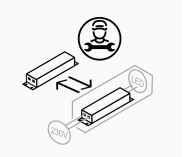

CE