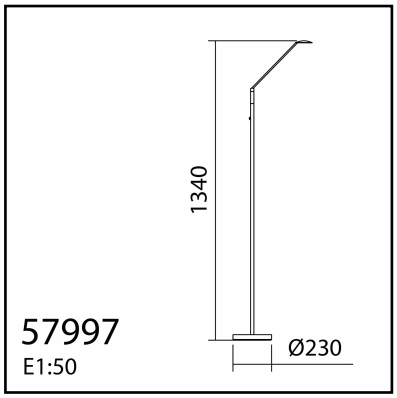



TECHNICAL DATA 579978102

LAMP INFO

Description:	FL DAPHNE R blanco LED 9W CCT
Mark:	20000 FL Floor Lamp
Reference:	579978102
Range:	
Code EAN:	8421797799786
Measures (mm):	230-230-1340
Weight (Kg):	3,40

		CCT:	2700K to 4000K	**Switch:**	Hand
		Lm:	840	**USB C:**	N
Class:	III	**Effi LS:**	E	**Shade:**	N
IP:	20			**Dimmable:**	Y
Voltage/Frequence:	24V DC 0.5A	**Lamp Power:**	9W	**Remote control:**	N

PACKAGING DETAILS

	Individual Box:	**Outer Box:**
Type:	Brown Printed	
Units:	1	1
Measures (mm):	940-110-270	940-110-270
Gros Weight (kg):	4,30	4,30
CTN 40':	2.425,68	

OBSERVATIONS

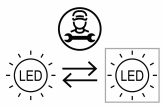

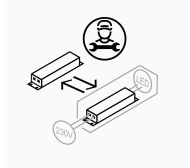

CE

MDC, SA P Font del Ferro 55, 17403 Sant Hilari Sacalm, Girona, España 972872226 www.mdc.es mdc@mdc.es