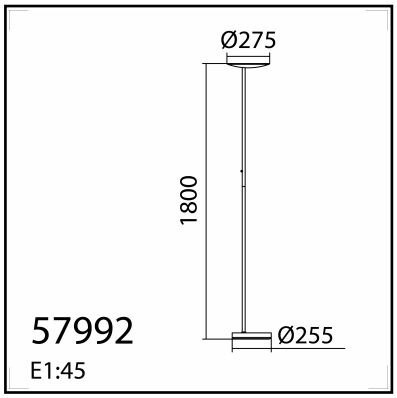



TECHNICAL DATA 579929102

LAMP INFO

Description:	FL DAPHNE S negro LED 33W CCT
Mark:	20000 FL Floor Lamp
Reference:	579929102
Range:	57991 DAPHNE
Code EAN:	8421797799298
Measures (mm):	255-255-1800
Weight (Kg):	5,40

		CCT:	2700K to 4000K	**Switch:**	Hand
		Lm:	3.300	**USB C:**	N
Class:	III	**Effi LS:**	D	**Shade:**	N
IP:	20	**CRI:**	>80	**Dimmable:**	Y
Voltage/Frequence:	24V DC 1.5A	**Lamp Power:**	33W	**Remote control:**	N

PACKAGING DETAILS

	Individual Box:	**Outer Box:**
Type:	Brown Printed	
Units:	1	1
Measures (mm):	1025-130-305	1025-130-305
Gros Weight (kg):	6,60	6,60
CTN 40':	1.666,29	

OBSERVATIONS

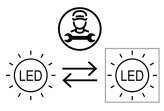

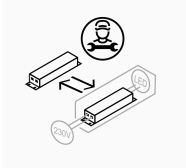

CE