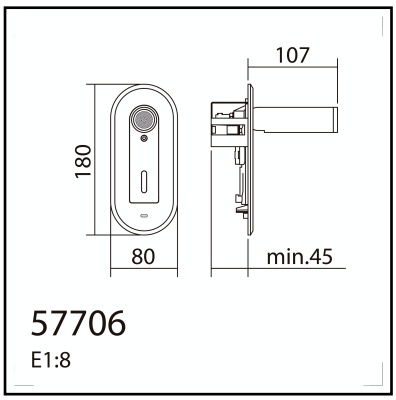



TECHNICAL DATA 577066109

LAMP INFO

Description:	WL PALACE latón mate LED 3W + touch + USB C
Mark:	10002 WL Wall Lamp
Reference:	577066109
Range:	57705 PALACE
Code EAN:	8421797770679
Measures (mm):	80-180-107
Weight (Kg):	0,56

		CCT:	3000K	**Switch:**	Touch
		Lm:	145	**USB C:**	Y
Class:	II	**Effi LS:**	G	**Shade:**	N
IP:	20	**CRI:**	>80	**Dimmable:**	N
Voltage/Frequence:	230Vac 50/60Hz	**Lamp Power:**	3.5W	**Remote control:**	N

PACKAGING DETAILS

	Individual Box:	**Outer Box:**
Type:	Brown Printed	Brown Printed
Units:	1	12
Measures (mm):	100-110-215	325-240-450
Gros Weight (kg):	0,70	9,10
CTN 40':	28.634,31	

OBSERVATIONS

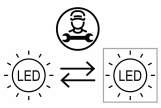

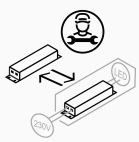

CE